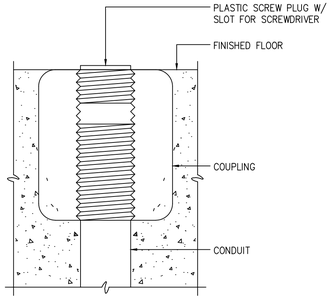

CONDUIT, FLOOR STUB-UP

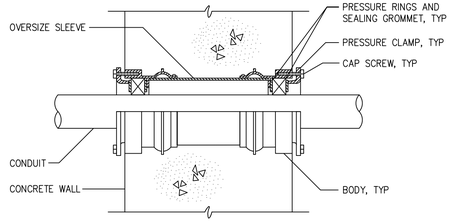

NOTE: USE O-Z/GEDNEY SEAL, TYPE "FSK", "WSK", OR EQUAL

CONDUIT THROUGH WALL SEAL

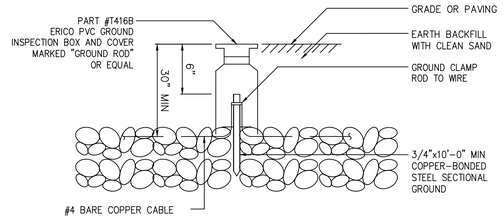

NOTES:

1 REFER TO PS DESIGN MANUAL FOR MINIMUM SYSTEM RESISTANCE. IF THIS RESISTANCE CANNOT BE MET WITH SINGLE 10'-0" RODS, ADD ADDITIONAL SECTIONS TO RODS OR ADD NEW RODS AS REQUIRED, SPACED 10'-0" MIN. FROM EXISTING RODS.

ELECTRICAL INSTALLATION DETAIL
GROUND ROD ASSEMBLY

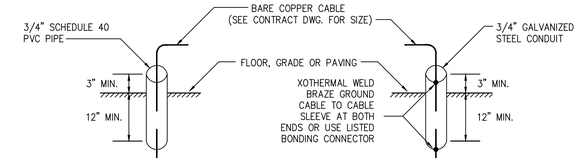

GROUND CABLE SLEEVE INSTALLATION

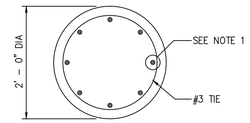

PLAN

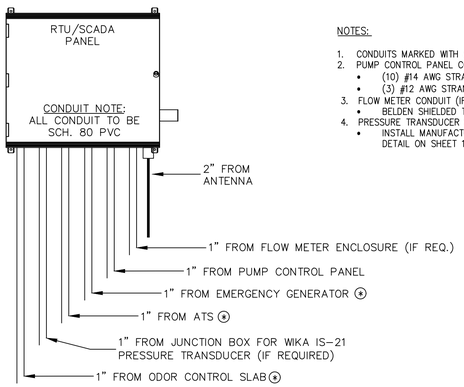

NOTES:

1. CONDUITS MARKED WITH AN GET (6) #14 AWG STRANDED COPPER THHN CONDUCTORS
2. PUMP CONTROL PANEL CONDUIT:
   - (10) #14 AWG STRANDED COPPER THHN
   - (3) #12 AWG STRANDED COPPER THHN
3. FLOW METER CONDUIT (IF REQUIRED):
   - BELDEN SHIELDED TWISTED 2-WIRE 4-20mA ANALOG CABLE
4. PRESSURE TRANSDUCER CONDUIT:
   - INSTALL MANUFACTURERS CABLE PER NOTE #5 AT ELECTRICAL JUNCTION BOX DETAIL ON SHEET 1 OF 4

SCADA/RTU PANEL CONDUIT DETAIL

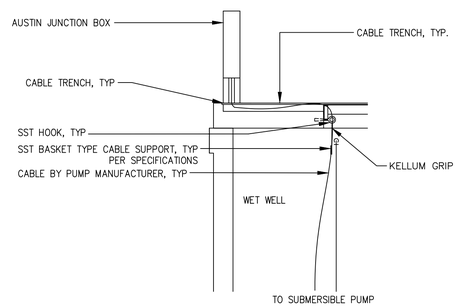

PUMP CABLE DETAIL

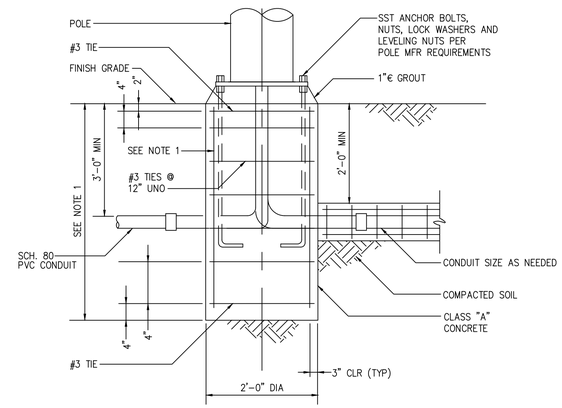

ELEVATION

NOTES:

1 IF NOT SPECIFIED OR SHOWN, DEPTH AND REINFORCEMENT SHALL BE DETERMINED BY POLE MANUFACTURER. LOADING SHALL BE DEAD LOAD PLUS 140 MPH WIND, STANDARD EXPOSURE PER STANDARD BUILDING CODE.

AREA LIGHTING BASE MOUNTING

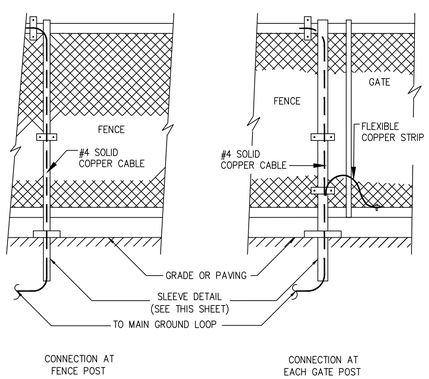

NOTE: THE PUMP STATION FENCE AND GATES SHALL BE BONDED TO THE PUMP STATION GROUNDING SYSTEM AS SHOWN.

FENCE GROUNDING INSTALLATION DETAIL

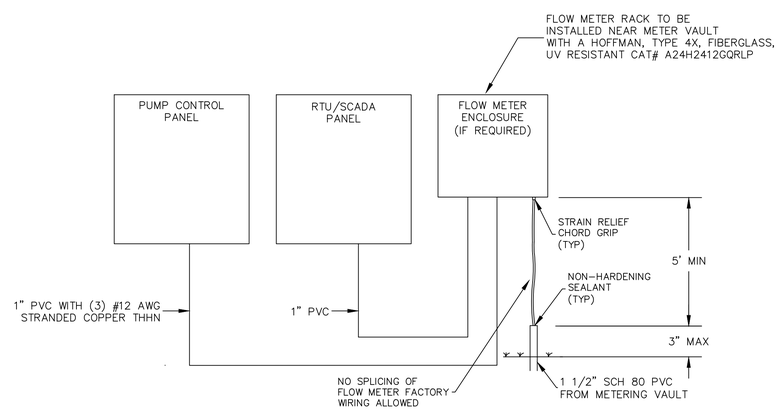

FLOW METER ENCLOSURE
WIRING SCHEME

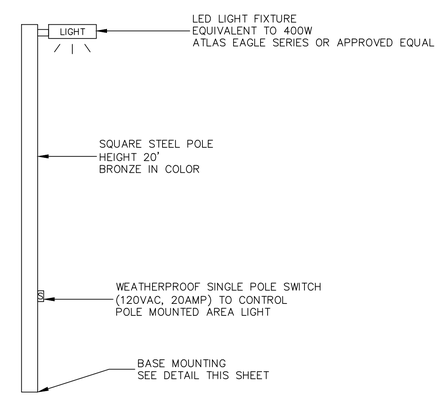

AREA LIGHTING FIXTURE MOUNTING

Revisions

1.01 - DATED 8/8/2013
1.02 - DATED 10/15/2013
1.03 - DATED 5/2/2016
1.04 - DATED 10/9/2017
1.05 - DATED 11/9/2018
1.06 - DATED 11/28/2018
1.07 - DATED 5/22/2019
1.08 - DATED 5/5/2023
1.09 - DATED 5/1/2024
Mod. SCADA Panel & Flow meter

COUNTY OF BRUNSWICK

PUMP STATION DETAILS
50 HP OR SMALLER PUMP STATION
FOR
BRUNSWICK COUNTY
NORTH CAROLINA

Date: 04-25-12
Scale: NTS
Drawn By: JDM
Checked By: WLP