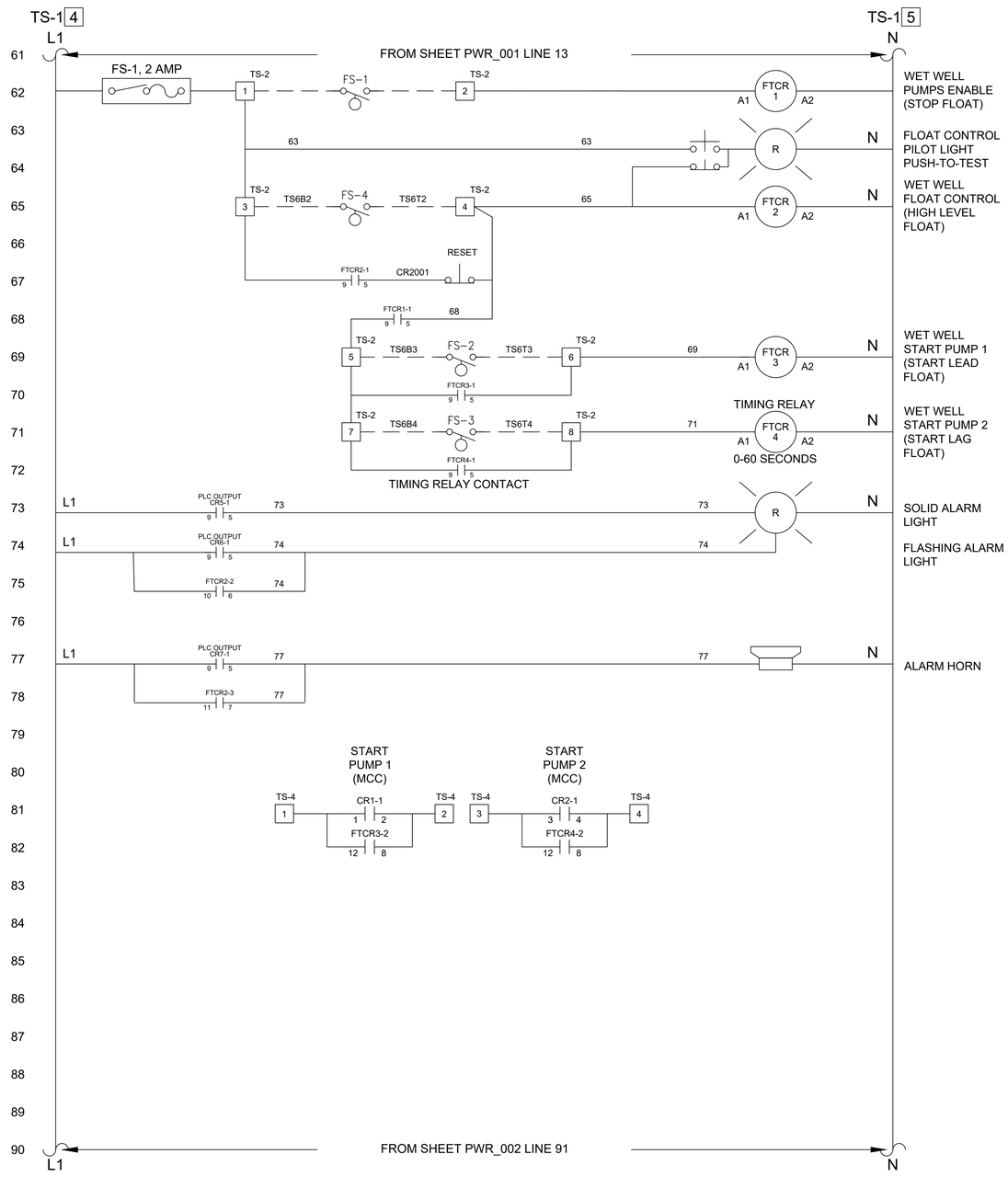

Revisions

1.01 - DATED 4/29/2016
Overhauled

COUNTY OF BRUNSWICK

CONTROL PANEL
PUMPS LARGER THAN 50 HP
UTILIZING SOFT STARTS
FOR
BRUNSWICK COUNTY
NORTH CAROLINA

Date: 05-21-12
Scale: NTS
Drawn By: JDM
Checked By: WLP