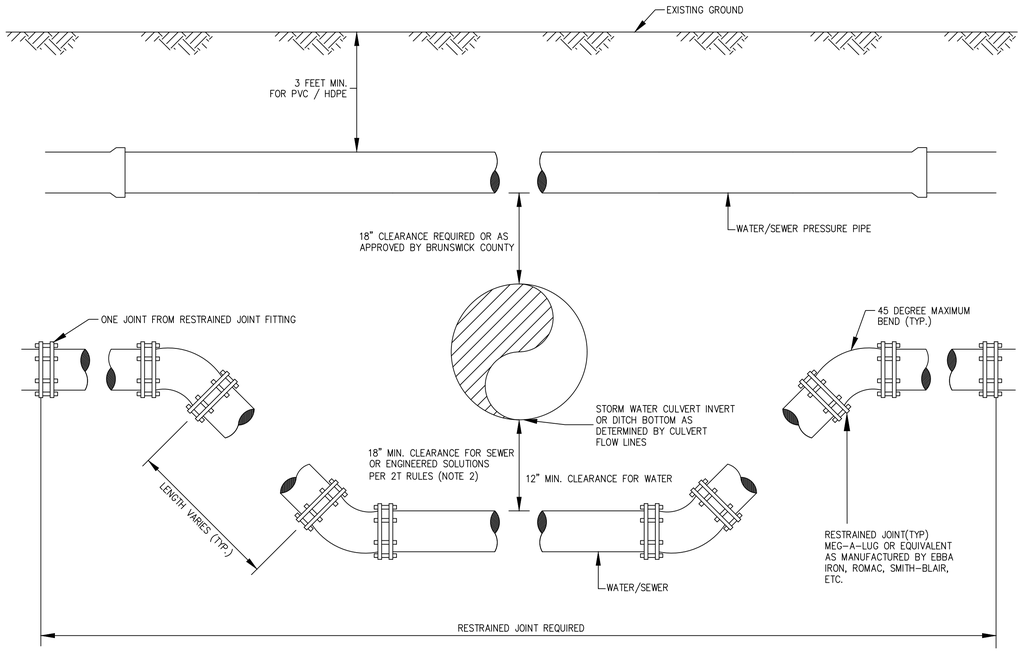

NOTES:

1. USE STAINLESS STEEL THREADED RODS, MEGA-LUG OR APPROVED EQUAL FOR JOINT RESTRAINT.
2. SEWER REQUIRES DR-18 C900 UNLESS OTHERWISE APPROVED BY BRUNSWICK COUNTY.
3. WATER MAY BE DIP OR DR-18 C900 PIPE.

DITCH AND/OR STORM DRAIN CROSSING
OFFSETS BETWEEN WATER/SEWER
PRESSURE MAIN AND STORM DRAIN
DETAIL WS-20

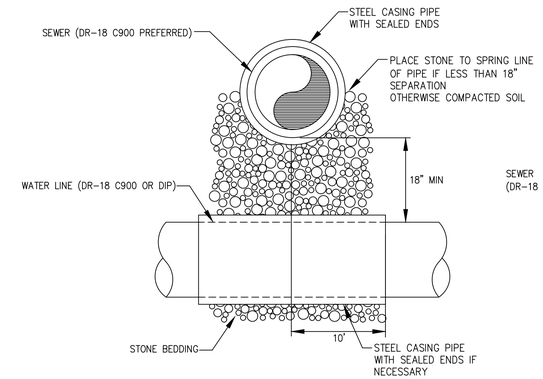

NOTES:

1. BOTH THE WATER MAIN AND THE SEWER MAIN SHALL BE FERROUS MATERIALS WITH JOINTS EQUIVALENT TO WATER MAIN STANDARDS FOR A MINIMUM DISTANCE OF 10 FEET ON EACH SIDE OF THE CROSSING.
2. ALTERNATIVELY, PIPES MAY BE SLEEVED WITH FERROUS MATERIALS FOR A MINIMUM DISTANCE OF 10 FEET ON EACH SIDE OF THE CROSSING AS APPROVED BY BRUNSWICK COUNTY ENGINEERING.

SEWER CROSSING ABOVE WATER LINE

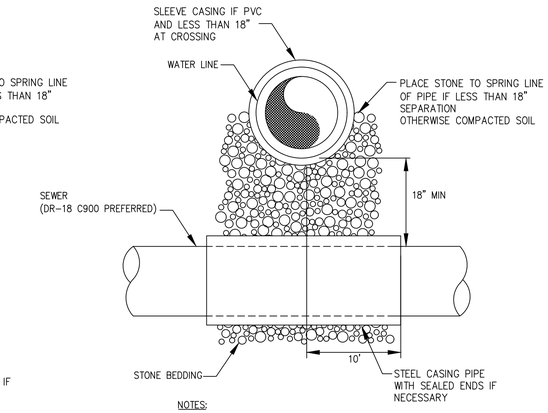

NOTES:

1. SOIL REPLACED UNDER THE WATER MAIN SHALL BE COMPACTED.
2. IF THE WATER MAIN CROSSES AT LESS THAN 18" ABOVE THE SEWER MAIN BOTH THE WATER MAIN AND THE SEWER MAIN SHALL BE FERROUS MATERIALS WITH JOINTS EQUIVALENT TO WATER MAIN STANDARDS FOR A MINIMUM DISTANCE OF 10 FEET ON EACH SIDE OF THE CROSSING, OR THEY MAY HAVE FERROUS SLEEVES PUT AROUND THEM AS APPROVED BY BRUNSWICK COUNTY ENGINEERING.

SEWER CROSSING BELOW WATER LINE

SEWER OFFSETS ABOVE
AND BELOW WATER MAINS
DETAIL WS-21

DEPTH < 20 FEET – CLASS "A" BEDDING
- UNDERCUT TRENCH BOTTOM 6 INCHES MINIMUM BELOW PIPE
- FILL PIPE TO SPRING LINE WITH NO. 57 STONE

DEPTH > 20 FEET – CLASS "B" BEDDING
- UNDERCUT TRENCH BOTTOM 6 INCHES MINIMUM BELOW PIPE
- FILL TO 6 INCHES ABOVE PIPE WITH NO. 57 STONE

INSTALLATIONS THAT EXCEED 20 FEET DEPTH SHALL BE DR-18 C900 MINIMUM OR PER MANUFACTURERS RECOMMENDATIONS

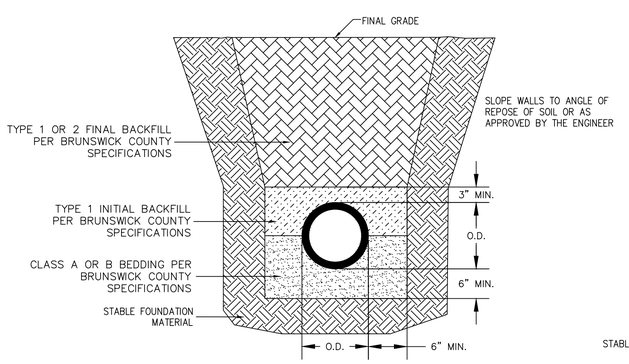

NOTES:

1. REFER TO THE BRUNSWICK COUNTY TECHNICAL SPECIFICATIONS FOR BACKFILL AND TRENCHING REQUIREMENTS
2. PIPE SIZE AS INDICATED ON PLANS

GRAVITY SEWER
PIPE TRENCH/BEDDING DETAIL
DETAIL WS-22

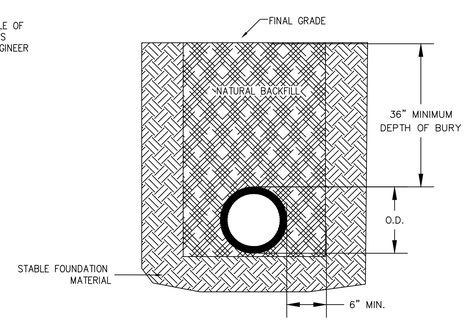

WATERMAIN AND/OR SEWER FORCEMAIN (PRESSURE PIPE)
PIPE TRENCH/BEDDING DETAIL
DETAIL WS-22A

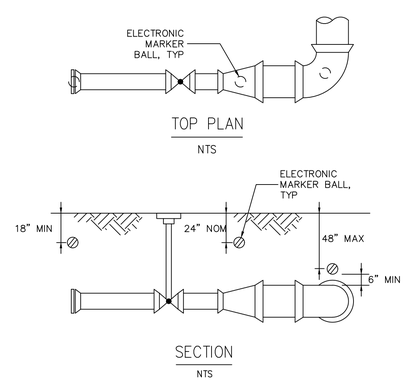

NOTES:

1. ELECTRONIC MARKER BALL MATERIALS SHALL BE AS FOLLOWS:

a. WATER – 3M SCOTCHMARK ELECTRONIC MARKER, MODEL # 1403-XR, 4-INCH DIAMETER, BLUE
b. SEWER – 3M SCOTCHMARK ELECTRONIC MARKER, MODEL # 1404-XR, 4-INCH DIAMETER, GREEN
c. RECLAIMED WATER – 3M SCOTCHMARK ELECTRONIC MARKER, MODEL # 1408-XR, 4-INCH DIAMETER, PURPLE

2. PLACEMENT SHALL CONFORM TO DETAILS ABOVE. FOR FURTHER GUIDANCE, REFER TO BRUNSWICK COUNTY TECHNICAL SPECIFICATIONS SECTION TITLED "ELECTRONIC MARKER BALLS FOR WATER AND SEWER FORCE MAINS".

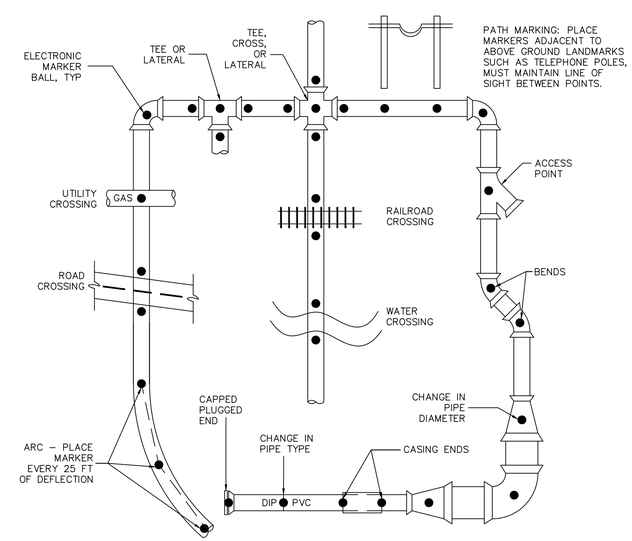

ELECTRONIC MARKER
BALL PLACEMENT DETAIL
DETAIL WS-23

Revisions

1.01 - DATED 7/12/2013
1.02 - DATED 1/16/2014
1.03 - DATED 1/23/2019
1.04 - DATED 7/16/2019
1.05 - DATED 2/12/2021
Mod WS-20 & WS-21

COUNTY OF BRUNSWICK

GENERAL WATER & SEWER DETAILS
FOR
BRUNSWICK COUNTY
NORTH CAROLINA

Date: 07-11-12
Scale: NTS
Drawn By: JDM
Checked By: WLP