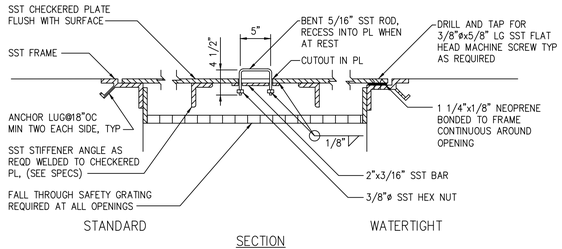

SECTION

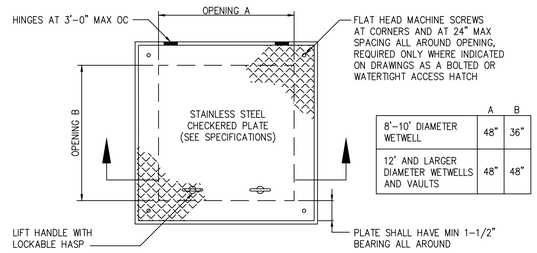

	A	B
8'-10' DIAMETER WETWELL	48"	36"
12' AND LARGER DIAMETER WETWELLS AND VAULTS	48"	48"

PLAN

ACCESS HATCH
DETAIL WS-17

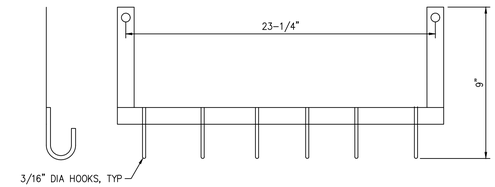

CABLE HOLDER

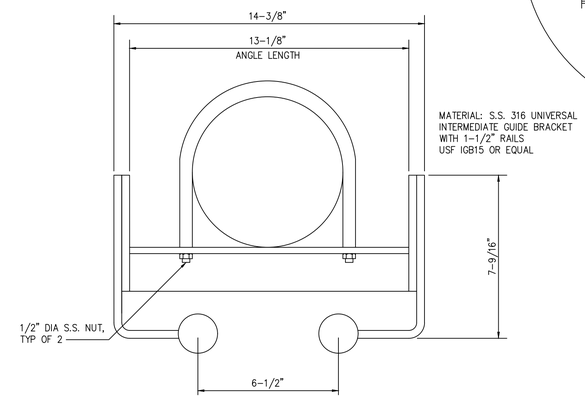

MATERIAL: S.S. 316 UNIVERSAL INTERMEDIATE GUIDE BRACKET WITH 1-1/2" RAILS USF IGB15 OR EQUAL

BRACKET DETAIL

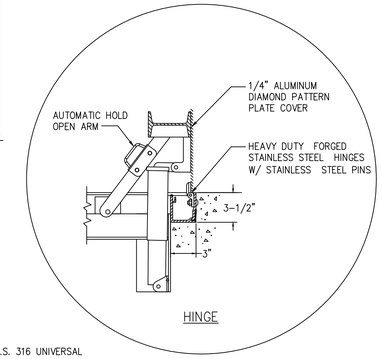

HINGE

NOTES:

1. TAPPING SADDLES ARE NOT ALLOWED WHEN CONNECTING MAIN DIAMETER IS 50% OR LARGER THAN EXISTING MAIN TO BE TAPPED.
2. USE STAINLESS STEEL ROMAC, FORD, OR MUELLER TAPPING SLEEVES FOR TAP SIZES 4" – 24".
3. USE STAINLESS STEEL TAPPING SLEEVES BY DRESSER, CASCADE, AND JCM FOR TAPS ON MAINS 30" AND GREATER.
4. ALL HARDWARE (BOLTS, NUTS, ETC) FOR ALL TAPPING SLEEVES SHALL BE 304 STAINLESS STEEL.
5. DEPTH FROM GROUND SURFACE TO TOP OF BLOCKING SHALL BE GREATER THAN HEIGHT OF BLOCKING.

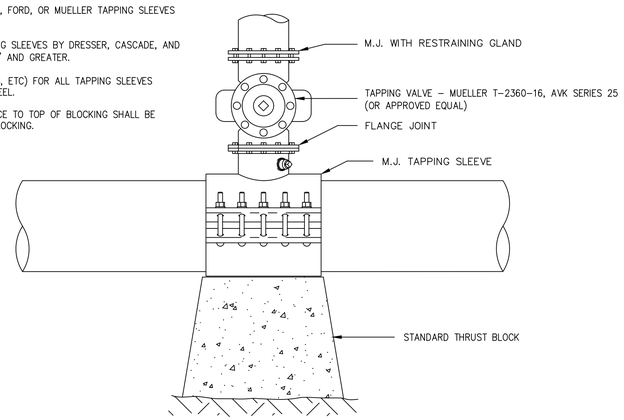

TAPPING SLEEVE & VALVE ASSEMBLY
DETAIL WS-18

NOTES:

1. TAPPING SADDLES ARE NOT ALLOWED WHEN CONNECTING MAIN DIAMETER IS 50% OR LARGER THAN EXISTING MAIN TO BE TAPPED.
2. USE WIDE BAND BODY TAPPING SADDLES BY ACIPCO, US PIPE, OR EQUAL, PER BRUNSWICK COUNTY TECHNICAL SPECIFICATIONS.
3. ALL HARDWARE (BOLTS, NUTS, ETC) FOR ALL TAPPING SADDLES SHALL BE 304 STAINLESS STEEL.
4. DEPTH FROM GROUND SURFACE TO TOP OF BLOCKING SHALL BE GREATER THAN HEIGHT OF BLOCKING.

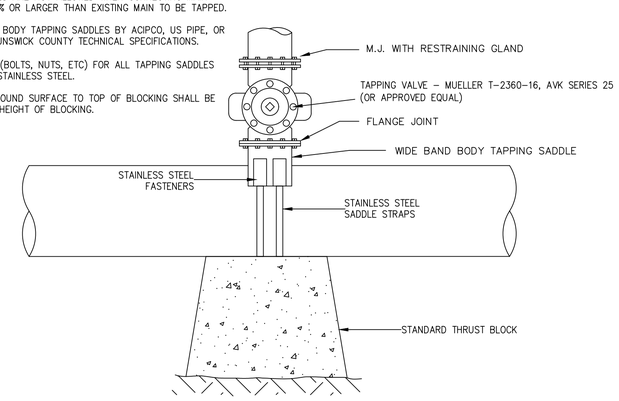

TAPPING SADDLES & VALVE ASSEMBLY
DETAIL WS-19

Revisions

1.01 - DATED 1/16/2014
Removed WS-20

COUNTY OF BRUNSWICK

GENERAL WATER & SEWER DETAILS
FOR
BRUNSWICK COUNTY
NORTH CAROLINA

Date: 06-13-12
Scale: NTS
Drawn By: JDM
Checked By: WLP