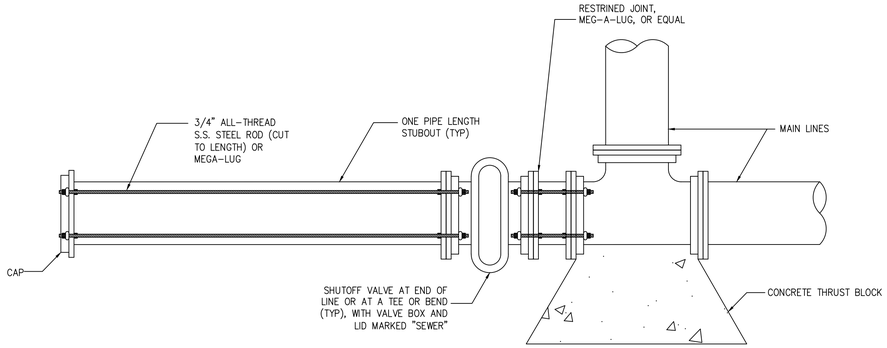

PLAN VIEW

FUTURE FORCE MAIN STUBOUT
DETAIL S-18

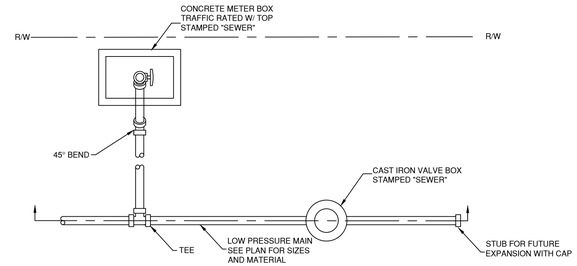

PLAN VIEW

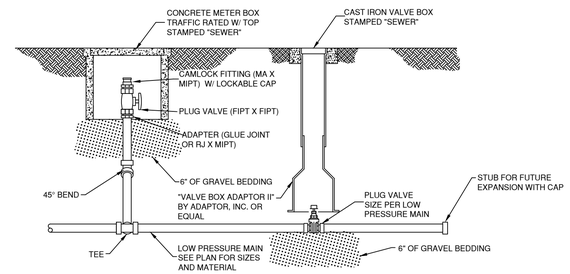

SECTION VIEW

NOTE
SLOPE FINISH GRADE TO DRAIN AWAY FROM BOXES.
FOR MAINS TO BE EXTENDED IN THE FUTURE

LOW PRESSURE TEMPRORARY SEWER CLEANOUT
DETAIL S-19

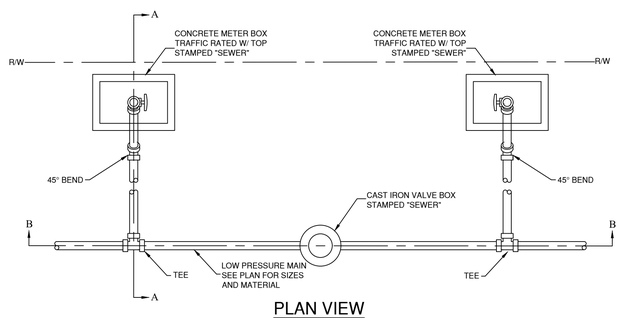

PLAN VIEW

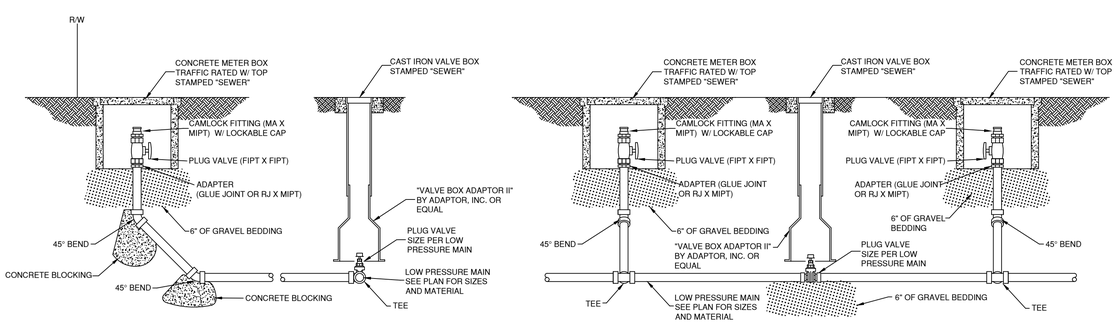

NOTE
SLOPE FINISH GRADE TO DRAIN AWAY FROM BOXES.

SECTION VIEW A-A

SECTION VIEW B-B

LOW PRESSURE IN-LINE SEWER CLEANOUT
DETAIL S-20

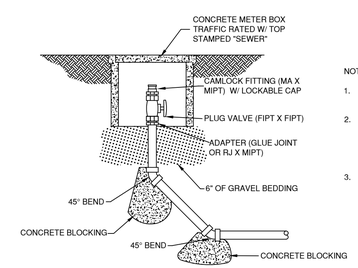

NOTE:

1. GASKETED OR GLUE JOINT PIPE PER APPROVED PLANS.
2. RESTRAINED JOINTS SHALL BE INSTALLED ON GASKETED PIPE PER BRUNSWICK COUNTY TECHNICAL SPECIFICATIONS.
3. THRUST BLOCKING IS MANDATORY.

LOW PRESSURE END-OF-LINE SEWER CLEANOUT
DETAIL S-21

Revisions

1.01 - DATED 4/30/2013
1.02 - DATED 3/10/2017
1.03 - DATED 8/17/2021
Additional Detail

COUNTY OF BRUNSWICK

GENERAL SEWER DETAILS
FOR
BRUNSWICK COUNTY
NORTH CAROLINA

Date: 1-9-12
Scale: NTS
Drawn By: JTP, MGB
Checked By: